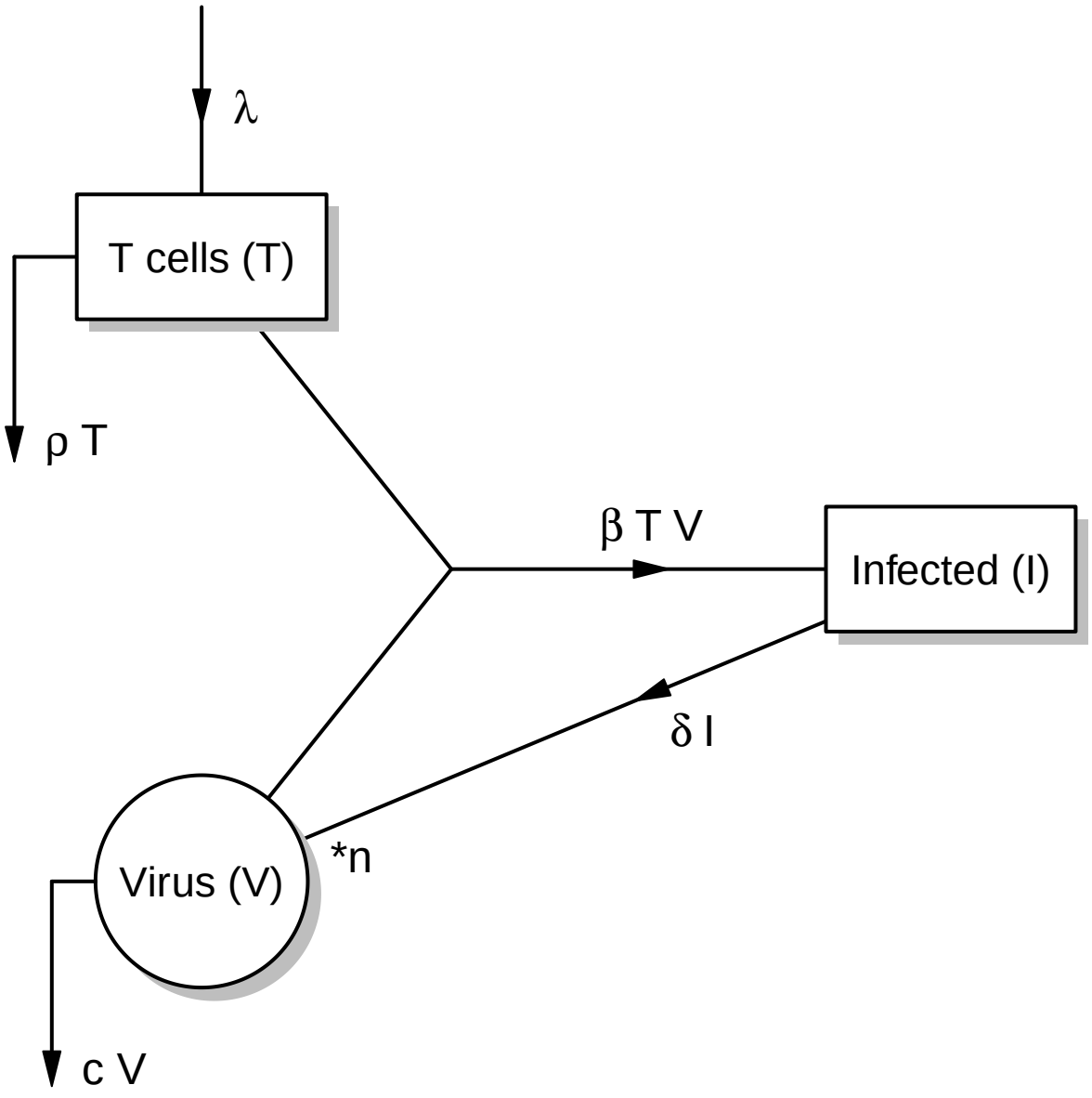
λ
T cells (T)
ρ T
β T V
Infected (I)
δ I
*n
Virus (V)
c V